CONNECTING PLATE

With mounting surface according to Schiedrum – internal NG 15
for 2-Way-flow control valve

Type
AP
9-74-200-0019

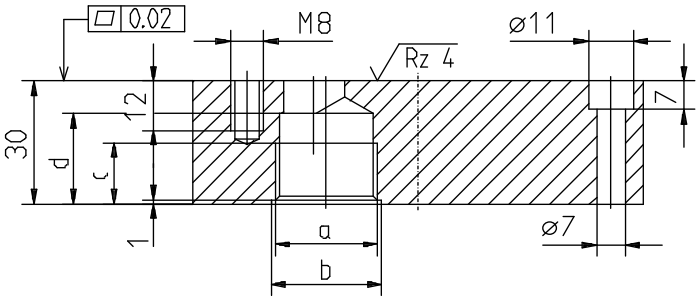

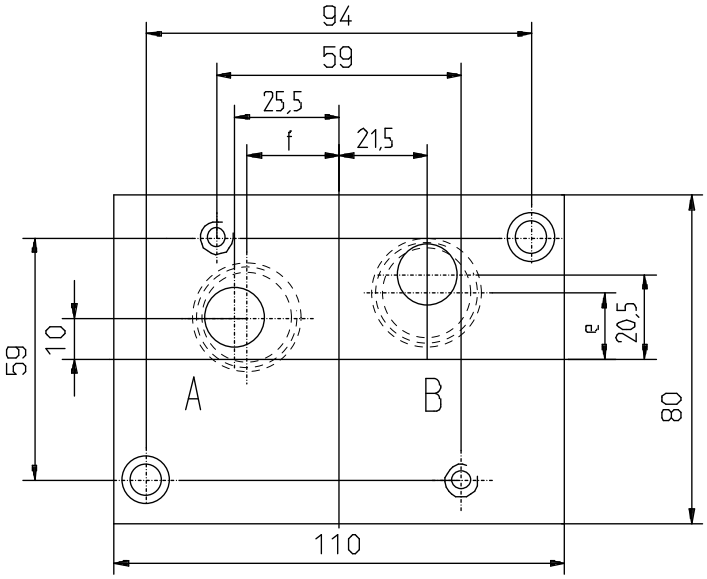

Measuring (mm)		
a	G1/2	G3/4
b	27	33
c	15	17
d	22	22
e	17,5	16
f	25,5	22
Weight (kg)		
	1,9	1,8
Material: steel; bronzed		

ORDER INFORMATION

Name

Connecting plate	**G1/2**	**44-200-00114**

Connecting size and Order- No.:
G 1/2 44-200-00114
G 3/4 44-200-10115